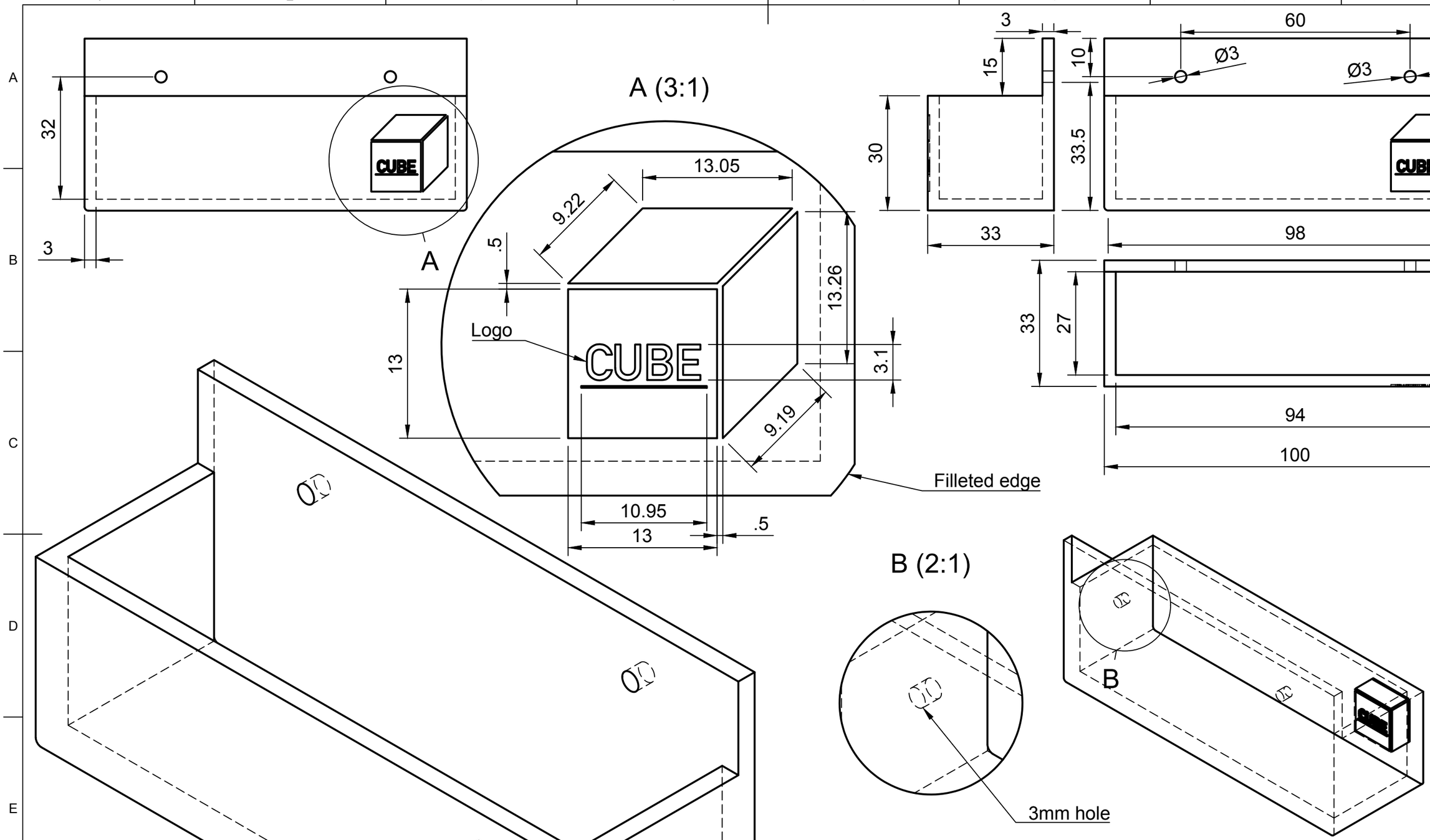

Dept.	Technical reference	Created by	Approved by
CAD	Car Stand Box	Thomas Charnock 4/11/2022	James Everett & Joe Biggs 4/11/2022
		Document type: Autodesk Fusion 360 (.f3d)	Document status: Completed
		Title: Car Stand Box P2	DWG No.: 2
			Rev. 1 / Date of issue 4/11/2022 / Sheet 1/1